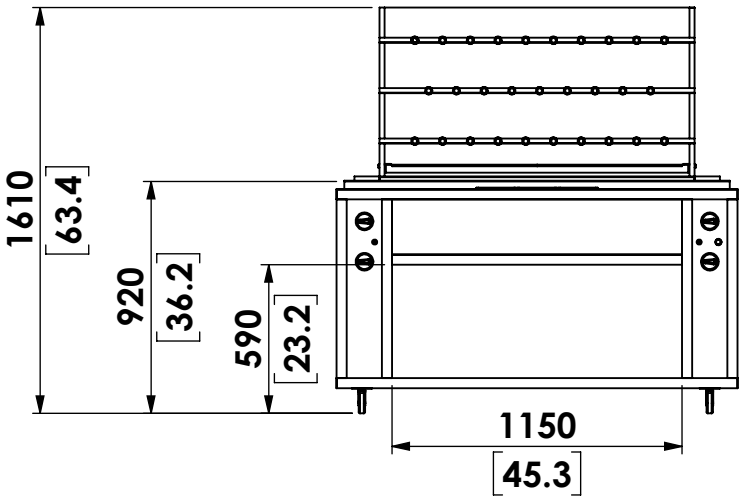
1610
[63.4]
920
[36.2]
590
[23.2]
1150
[45.3]

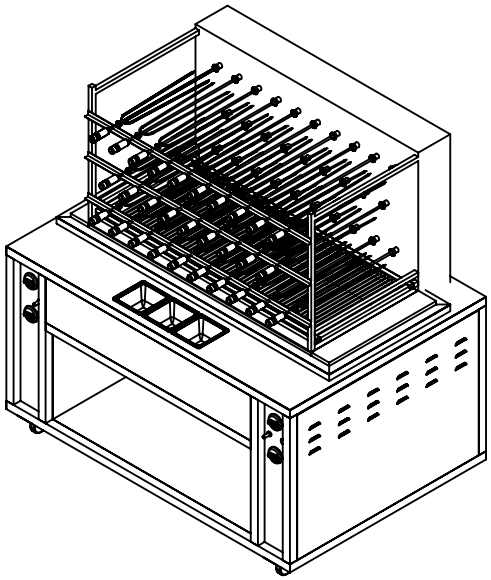

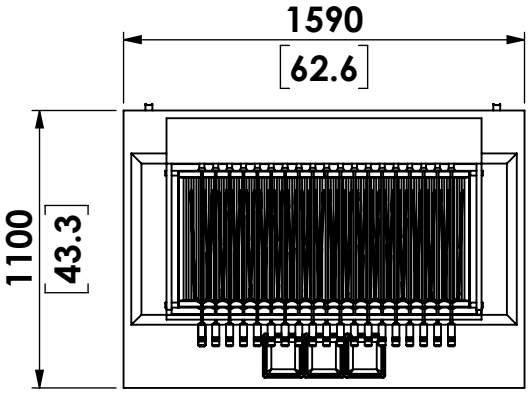
1590
[62.6]
1100
[43.3]