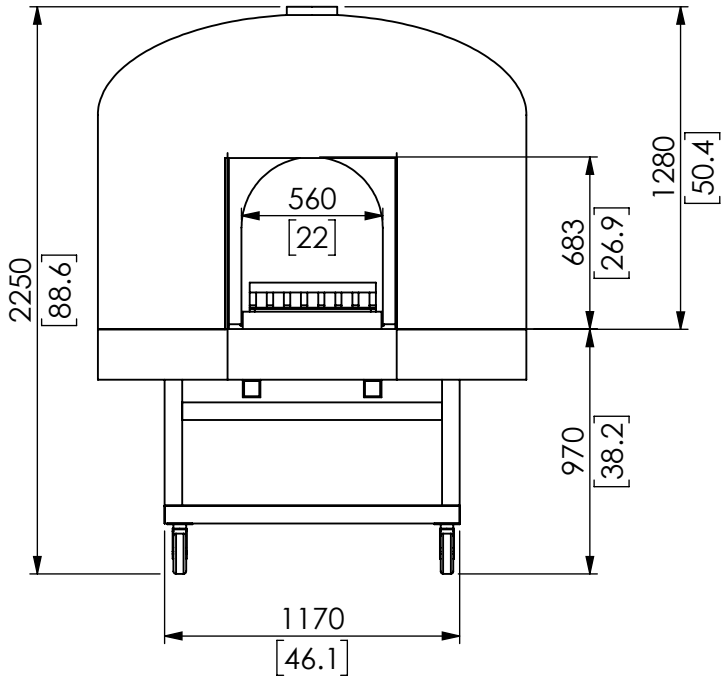

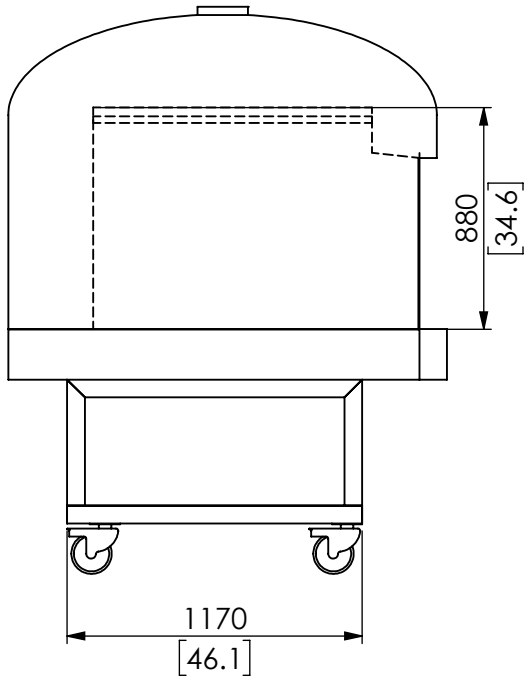

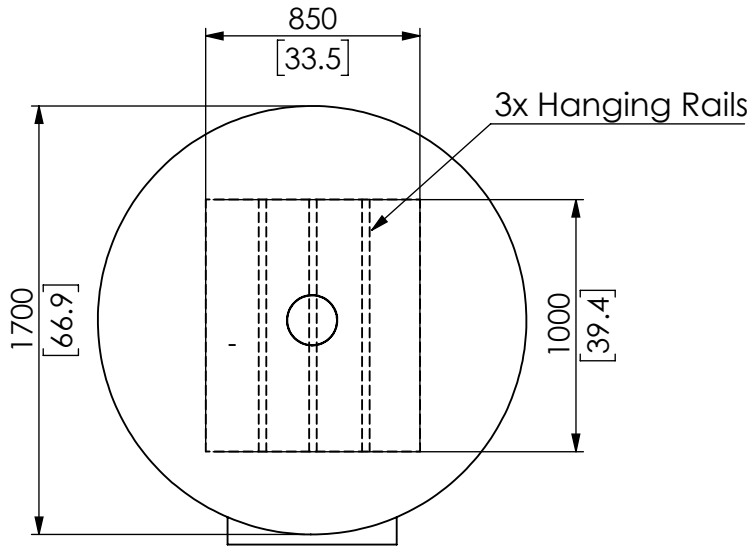

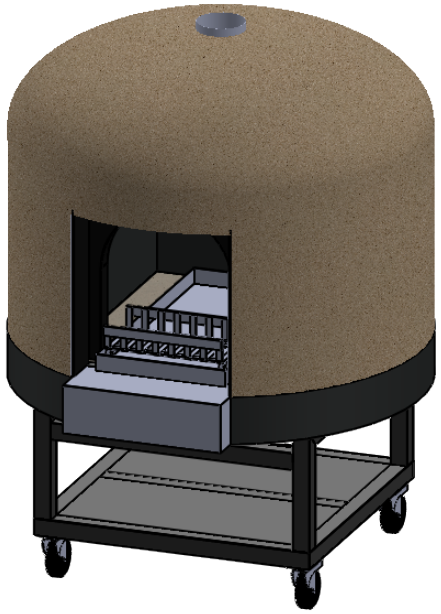

-

THE CLAYOVEN COMPANY			Note: Due to the hand finishing techniques used in the manufacture of the products, and the Clay Oven Company's policy of continuous product improvement, specifications & design are subject to change without prior notice.
DWG NO. 1700 round Duck Oven	A4		Unless otherwise stated all dimensions are in mm
	Scale:1:30	Date: 12/03/2019	Created by: BP / SHEET 1 OF 1

12 December 2017 13:53:18